Pfister
FAUCETS

KSD-MDS

Modern Soap Pump
Dispensador de Jabón de Estilo Moderna
Distributeur de Savon de Style Moderne

Quick Installation Guide
Guía de Instalación Rápida
Guide d'Installation Rapide

Installation Support • Soporte de Instalación • Support d'Installation

Personal Assistance, Product Specs, & "How-to" Questions:

Asistencia personal, especificaciones del producto y preguntas sobre "cómo hacerlo":

Aide personnelle, spécifications du produit et questions « pratico-pratiques » :

1-800-PFAUCET (732-8238)
pfisterfaucets.com/support

WARNING / ADVERTENCIA / AVERTISSEMENT

To reduce the risk of injury or property damage, read all instructions before installing product. Wear safety goggles. Product must be installed in accordance with all state & local plumbing & building codes. Call a professional if you are uncertain about installing this product.

Para disminuir el riesgo de lesiones o daños a la propiedad, lea todas las instrucciones antes de instalar el producto. Utilice gafas de seguridad. El producto deberá instalarse de acuerdo con la normativa de plomería y construcción estatal y local. Llame a un profesional si no está seguro sobre cómo instalar este producto.

Pour réduire le risque de blessures ou de dommages, lire toutes les instructions avant d'installer le produit. Portez des lunettes de sécurité. Il faut installer le produit en respectant tous les codes de construction et de plomberie locaux et d'état. Appelez un professionnel si vous n'êtes pas certain de la façon d'installer ce produit.

Parts in the Box
Piezas en la caja
Pieces dans la boîte



A *B*

1 Disassemble Soap Pump
Desensamble la Bomba de Jabón
Démontez la Pompe à Savon

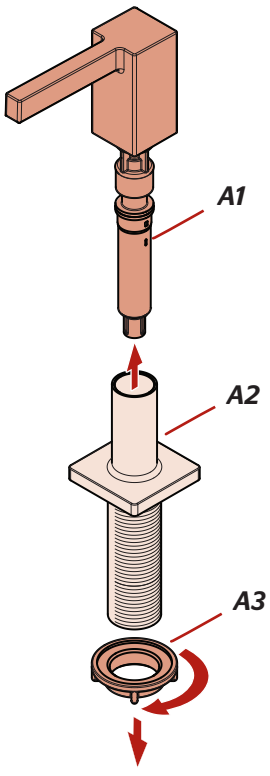

Copyright © 2026, Pfister Faucets, an ASSA ABLOY Group company. All rights reserved.
Reproduction in whole or in part without the express permission of Pfister Faucets is prohibited.

2 Install Soap Dispenser
Instale el dispensador de jabón
Installer le distributeur de savon

No Tools Required for This Step
No se necesitan herramientas para este paso
Aucun outil n'est nécessaire pour cette étape

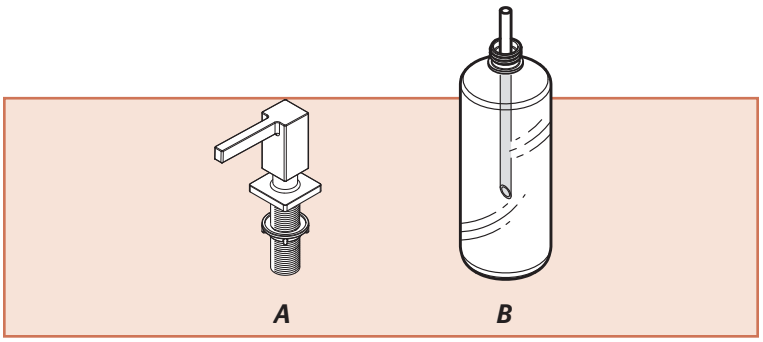

2A

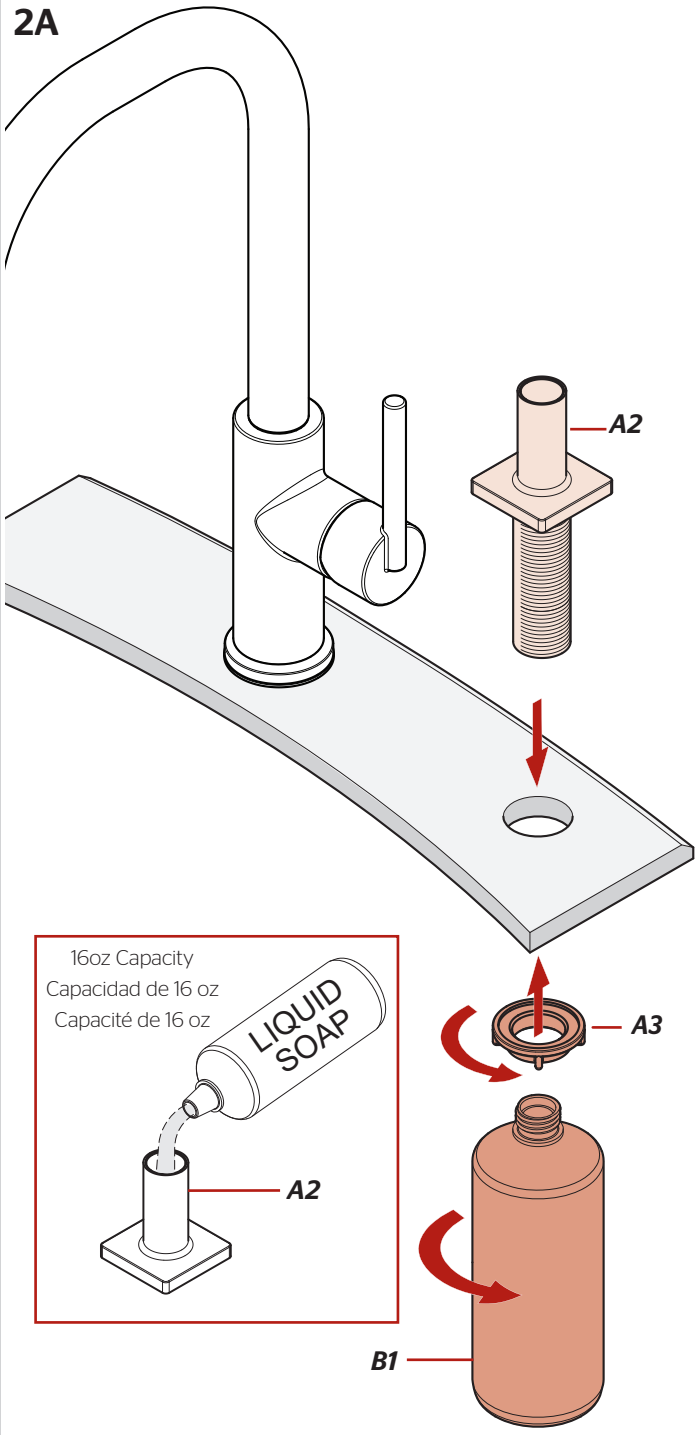

2B

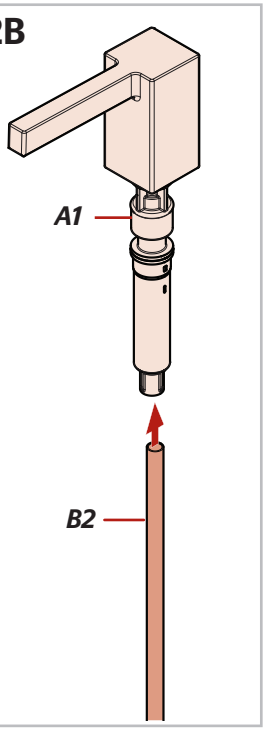

2C

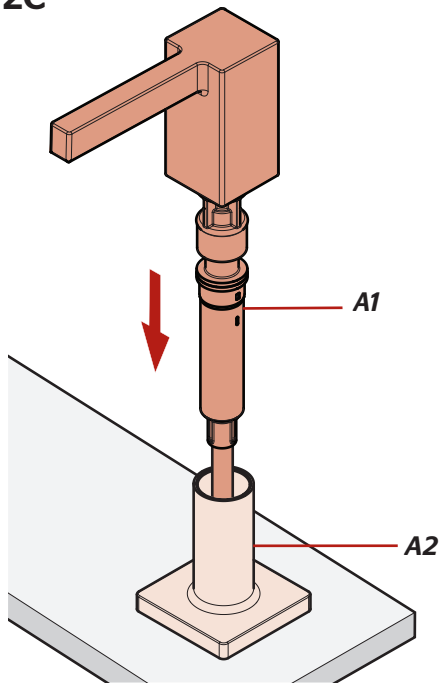

2D

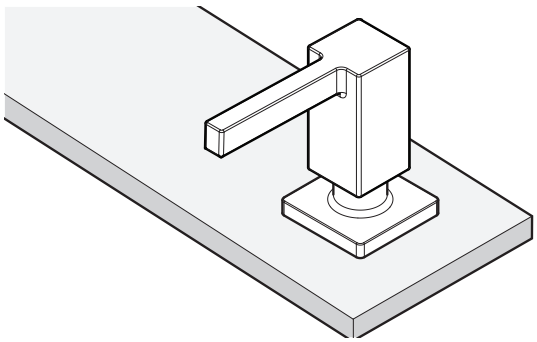

2D

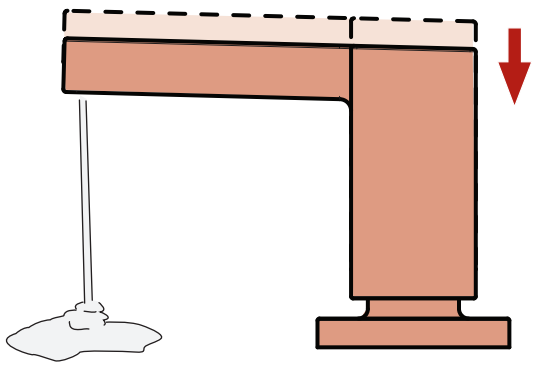

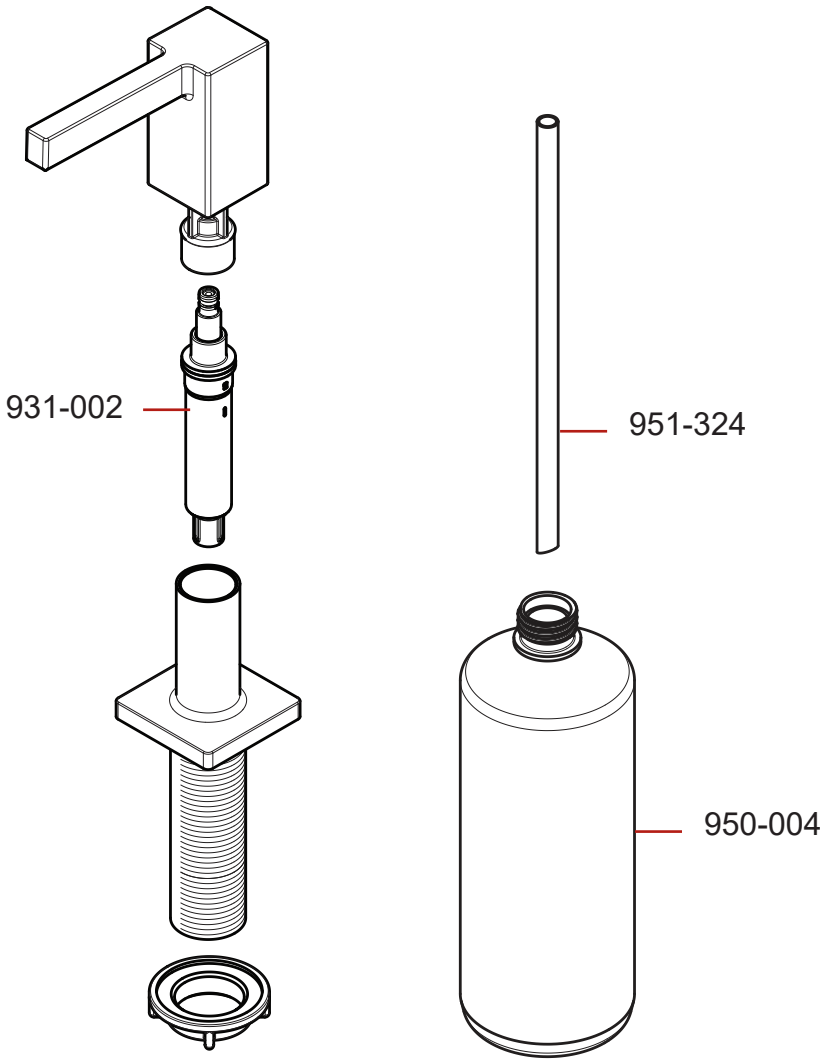

	English	Español	Français
*	Replace * with Finish Letter	Reemplaza * con letra de acabado	Remplace * avec la lettre de finition
A	Polished Chrome	Cromo Pulido	Chrome Poli
BG	Brushed Gold	Oro Cepillado	Or Brossé
D	Polished Nickel	Niquel Pulido	Nickel Poli
GM	Gunmetal	Grafito	Acier Inoxydable Noir
GS	Stainless Steel with Spot Defense	Acero Inoxidable con Spot Defense	Acier Inoxydable avec Spot Defense
SDB	Matte Black with Spot Defense	Negro Mate con Spot Defense	Noir Mat avec Spot Defense

CLEANING INSTRUCTIONS: Use only a soft damp cloth to clean and shine. Use of polish, detergents, abrasive cleaners, organic solvents, or acid may cause damage. Use of other than a soft damp cloth will nullify thewarranty!

INSTRUCCIONES PARA LIMPIEZA: Use solamente un paño suave y húmedo. El uso de pulidores, detergentes, limpiadores abrasivos, solventes orgánicos o ácidos puede provocar daños. ¡El uso de algo más que un paño suave y húmedo invalida la garantía!

INSTRUCTION DE NETTOYAGE: Utilisez uniquement un chiffon doux et humide pour nettoyer et faire briller. L'utilisation de polir, de détergents, de nettoyants abrasifs, les solvants organiques, ou acide peuvent causer des dommages. L'utilisation d'autres d'un chiffon doux humide annulera la garantie!

For Additional Installation Help:
Para la instalación adicionales de ayuda:
Pour aider à l'installation supplémentaires:

PFISTER FAUCETS

1-800-PFAUCET (732-8238)
pfisterfaucets.com

PFISTER ® LIFETIME LIMITED WARRANTIES

Lifetime Limited Warranties – Residential

Mechanical Limited Warranty: Except as otherwise provided below, ASSA ABLOY Americas Residential Inc., for its Pfister brand products ("Pfister"), warrants to the original residential purchaser that their Pfister product (the "Product," excluding the electronic sensor, control box, power unit, GE filter manifold and GE filter cartridges) will be free of all defects in materials and workmanship that would impair the intended and proper use of the Product for the lifetime of the Product, and the "lifetime" of the Product shall be from the date of purchase for as long as the original purchaser occupies the residential premises in which the Product was originally installed.

Electrical Component Limited Warranty: Except as otherwise provided below, for electrical components, including the electronic sensor, control box and power unit (battery pack or AC adapter), Pfister warrants to the original residential purchaser that the electrical components of their Product will be free of all defects in materials and workmanship for the lifetime of the Product, and the "lifetime" of the Product shall be for a period of five (5) years from the date of purchase, as long as the original purchaser occupies the residential premises in which the Product was originally installed.

GE Filter Manifold and Cartridges Limited Warranty: Except as otherwise provided below, for GE filter manifold and cartridges, Pfister warrants to the original residential purchaser that their Product will be free of all defects in materials and workmanship for the lifetime of the Product, and the "lifetime" of the Product shall be for a period of one (1) year from the date of purchase for the GE filter manifold and thirty (30) days from the date of purchase for the GE filter cartridges, as long as the original purchaser occupies the residential premises in which the Product was originally installed.

Finish Limited Warranty: Except as otherwise provided below, Pfister warrants to the original residential purchaser against deterioration of the Product's finish for the lifetime of the Product, and the "lifetime" of the Product shall be from the date of purchase for as long as the original purchaser occupies the residential premises in which the Product was originally installed.

Lifetime Limited Warranties – Commercial

Mechanical Limited Warranty: Except as otherwise provided below, if the Product is installed in a commercial application, Pfister warrants to the original commercial purchaser that their Product will be free of all defects in materials and workmanship that would impair the ordinary and proper use of the Product for the lifetime of the Product, and the "lifetime" of the Product shall be limited to a period of ten (10) years from the date of purchase, as long as the original purchaser owns the commercial premises in which the Product was originally installed.

Electrical Component Limited Warranty: Except as otherwise provided below, if the Product is installed in a commercial application, Pfister warrants to the original commercial purchaser that the electrical components of their Product will be free of all defects in materials and workmanship for the lifetime of the Product, and the "lifetime" of the Product shall be limited to a period of three (3) years from the date of purchase, as long as the original purchaser owns the commercial premises in which the Product was originally installed.

GE Filter Manifold and Cartridges Limited Warranty: Except as otherwise provided below, if the Product is installed in a commercial application, Pfister warrants to the original commercial purchaser that their Product will be free of all defects in materials and workmanship for the lifetime of the Product, and the "lifetime" of the Product shall be limited to a period of one (1) year from the date of purchase for the GE filter manifold, and a period of thirty (30) days from the date of purchase for the GE filter cartridges, as long as the original purchaser owns the commercial premises in which the Product was originally installed.

Finish Limited Warranty: Except as otherwise provided below, if the Product is installed in a commercial application, Pfister warrants to the original commercial purchaser against material deterioration of the Product's finish for the lifetime of the Product, and the "lifetime" of the Product shall be limited to a period of ten (10) years from the date of purchase, as long as the original purchaser owns the commercial premises in which the Product was originally installed.

Authorized Sellers: These residential and commercial warranties apply only to Products purchased from Pfister or a Pfister authorized seller, unless otherwise prohibited by law. Pfister Products are legitimately sold only by authorized sellers who are required to follow Pfister's policies, procedures, and quality control standards. Pfister reserves the right to reject warranty claims from purchasers for Products purchased from unauthorized sellers, including unauthorized Internet sites. If you have any questions about whether a seller is authorized, please contact us at 1-800-Pfaucet (1-800-732-8238).

Exclusions from Warranties

Pfister produces all Products in accordance with Pfister's institutional quality control standards. However, the Products are susceptible to indentation and imperfections due to specific processes, malleability of the materials, and the elements of human intervention during manufacture. Although our internal safeguards protect us against shipping Products of unacceptable quality, an imperfection or surface blemish may be considered the highest quality standard obtainable on a particular Product. All final decisions of quality remain exclusively in the discretion of Pfister.

Conditions that are not covered by these warranties include:

1. Any Pfister Product installed prior to January 1, 1997 is not covered bythese warranties.

2. Any Pfister Product which has been damaged as a result of installationcontrary to any of Pfister's written installation instructions is not covered by these warranties.

3. Any Pfister Product which has been modified by any non-Pfister componentis not covered by these warranties.

4. Any Pfister Product having a defect caused by neglect, misuse, abuse, orunreasonable or extraordinary use, or improper maintenance or repair, oraccidents or acts of God, is not covered by these warranties.

5. Any Pfister Product having a defect due to use of paints, solvents, or otherchemicals is not covered by these warranties.

6. Any Pfister Product that is used in combination with assemblies, aerators,cartridges, handles, hoses, spouts, or any other component other than thosemanufactured by Pfister and designated for use with the applicable Product isnot covered by these warranties.

7. Any Pfister Product that was purchased from an unauthorized seller is notcovered by these warranties.

These warranties are not transferable. Except as otherwise stated herein, ifthere are any differences between these warranties and warranties printed inmarketing or other Product materials, these warranties shall control.

Warranty Claims

Any Product believed to be defective as covered by these warranties may not be returned for warranty service without prior authorization from Pfister. Purchasers who wish to make a warranty claim based upon a Product defect must contact Pfister within thirty (30) days from the date of discovery of the alleged defect(s). In order to notify Pfister and receive assistance or service under these warranties, you may: (1) speak with a consumer service representative by calling 1-800-Pfaucet (1-800-732-8238), or (2) write to the Consumer Service Department c/o ASSA ABLOY Americas Residential Inc., 19701 DaVinci, Lake Forest, CA 92610, and include a description of the claimed defect, model number, your name, address, phone number, and a dated proof of purchase, or (3) email Pfister's customer service department by going to www.pfisterfaucets.com, or (4) notify the location or distributor from which the Product was purchased.

Please note that, for all warranty claims, you will be required to provide a description of any claimed defect(s) and a dated proof of purchase from Pfister or the Pfister authorized seller to verify warranty eligibility. Pfister reserves the right to request other information and evidence reasonably required to verify warranty eligibility and, if requested, you must permit inspection of the Product by Pfister or its representatives. If, after investigation, Pfister honors the warranty claim, the remedy will be performed by or on behalf of Pfister in accordance with the below heading, "Remedies." Please note that Products may not be returned to Pfister without prior authorization from Pfister. If authorized by Pfister, you will need to mail your Product to ASSA ABLOY Americas Residential Inc., 19701 DaVinci, Lake Forest, CA 92610.

Remedies

For certain claimed defect(s) covered by these warranties, as determined by Pfister, Pfister will provide you with troubleshooting steps. For other claimed defect(s) covered by these warranties, as determined by Pfister, Pfister will replace the defective Product or part. If a Pfister Product, which is the same

PFISTER® LIFETIME LIMITED WARRANTIES

as the Pfister Product or any part covered by these warranties, has been discontinued at the time of replacement or if Pfister determines, in its sole discretion, that such replacement is inappropriate, Pfister reserves the right to substitute an alternative product. Pfister also reserves the right to accept or reject an alternative product proposed as a replacement, when the value is higher than that of the Product originally purchased by the purchaser. Except as expressly provided in these warranties to the contrary, PFISTER SHALL NOT BE OBLIGATED OR LIABLE FOR LABOR CHARGES OR OTHER CHARGES RELATED TO INSTALLATION, REPAIR OR REPLACEMENT OF A PFISTER PRODUCT, OR FOR LOSS OF, OR DAMAGE TO, ANY MATERIAL WHICH IS NOT SOLD BY PFISTER.

Limitation of Liabilities

THERE ARE NO EXPRESS OR IMPLIED WARRANTIES THAT EXTEND BEYOND THOSE STATED HEREIN. ANY IMPLIED WARRANTIES THAT MAY BE APPLICABLE TO PRODUCTS, INCLUDING IMPLIED WARRANTIES OF MERCHANTABILITY OR FITNESS FOR A PARTICULAR PURPOSE, ARE LIMITED IN DURATION TO THE DURATION OF THIS WARRANTY. SOME STATES DO NOT ALLOW LIMITATIONS ON HOW LONG AN IMPLIED WARRANTY LASTS, SO THE ABOVE LIMITATION MAY NOT APPLY TO YOU. UNDER NO CIRCUMSTANCES SHALL PFISTER BE LIABLE FOR ANY SPECIAL, INCIDENTAL, OR CONSEQUENTIAL DAMAGES BASED UPON BREACH OF THIS LIMITED WARRANTY, BREACH OF CONTRACT, OR STRICT LIABILITY. SOME STATES DO NOT ALLOW THE EXCLUSION OR LIMITATION OF INCIDENTAL OR CONSEQUENTIAL DAMAGES, SO THE ABOVE LIMITATION OR EXCLUSION MAY NOT APPLY TO YOU. THIS WARRANTY GIVES YOU SPECIFIC LEGAL RIGHTS, AND YOU MAY ALSO HAVE OTHER RIGHTS WHICH VARY FROM STATE TO STATE.

Effective Date: January 30, 2025

Copyright © 2026, Pfister Faucets, an ASSA ABLOY Group company. All rights reserved.
Reproduction in whole or in part without the express permission of Pfister Faucets is prohibited.