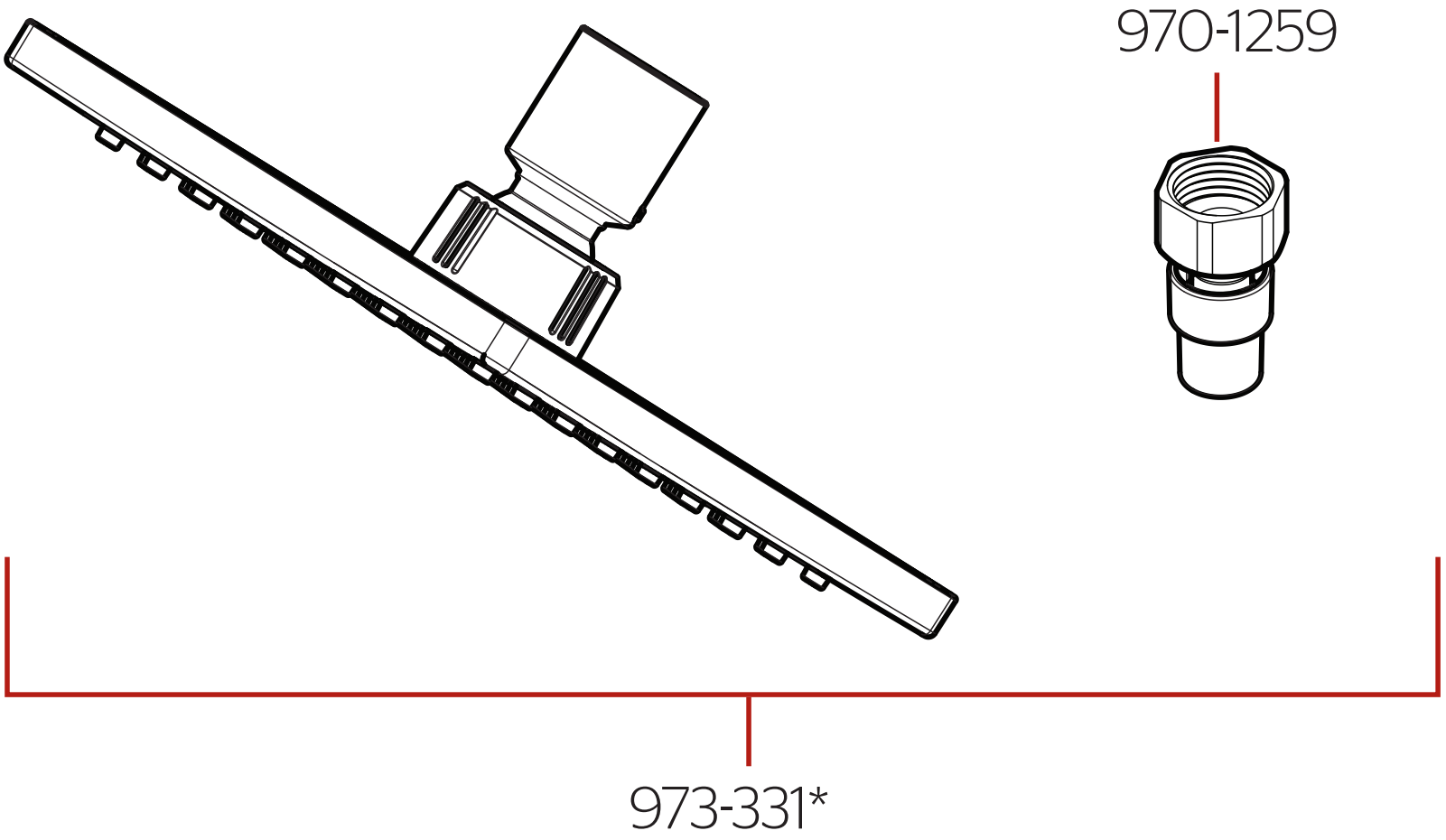

	English	Español	Français
A	Polished Chrome	Cromo Pulido	Chrome Poli
B	Matte Black	Negra Mate	Noir Mat
BG	Brushed Gold	Oro Cepillado	Or Brossé
J	PVD Brushed Nickel	PVD Niquel Cepillado	PVD Nickel Brosse