# HydroFuse™

*Handshower Kit*

016-WS2-HF01CC Finish*(CC)* ❑
016-WS2-HF01GS Finish*(GS)* ❑
016-WS2-HF01SDB Finish*(SDB)* ❑
016-WS2-HF01YY Finish*(YY)* ❑

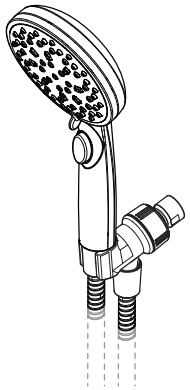

## Specifications

### *Features*

- 1.75 GPM Flow Rate
- Arm/Flange Not Included
- 60" Metal Hose
- Easy to Clean Nozzles
- Spot Defense™ Finish Resists Spots and Fingerprints (GS & SDB Finishes Only)
- Multiple Function Handheld (6 Functions: Full Spray, Full/Massage Combo, Massage, Pause, HydroFuse™, and HydroFuse™/Full Combo)
- Pause Button Feature
- Limited Lifetime Warranty

### *Code Compliance*

Pfister products are designed and manufactured in compliance with the following standards and codes:

- IAPMO Certified to ASME A112.18.1/CSA B125.1 including:
  - ASME A112.18.3 (Backflow Prevention)
- EPA WaterSense Certified
- CEC Certified/CALGreen compliant

## Dimensions

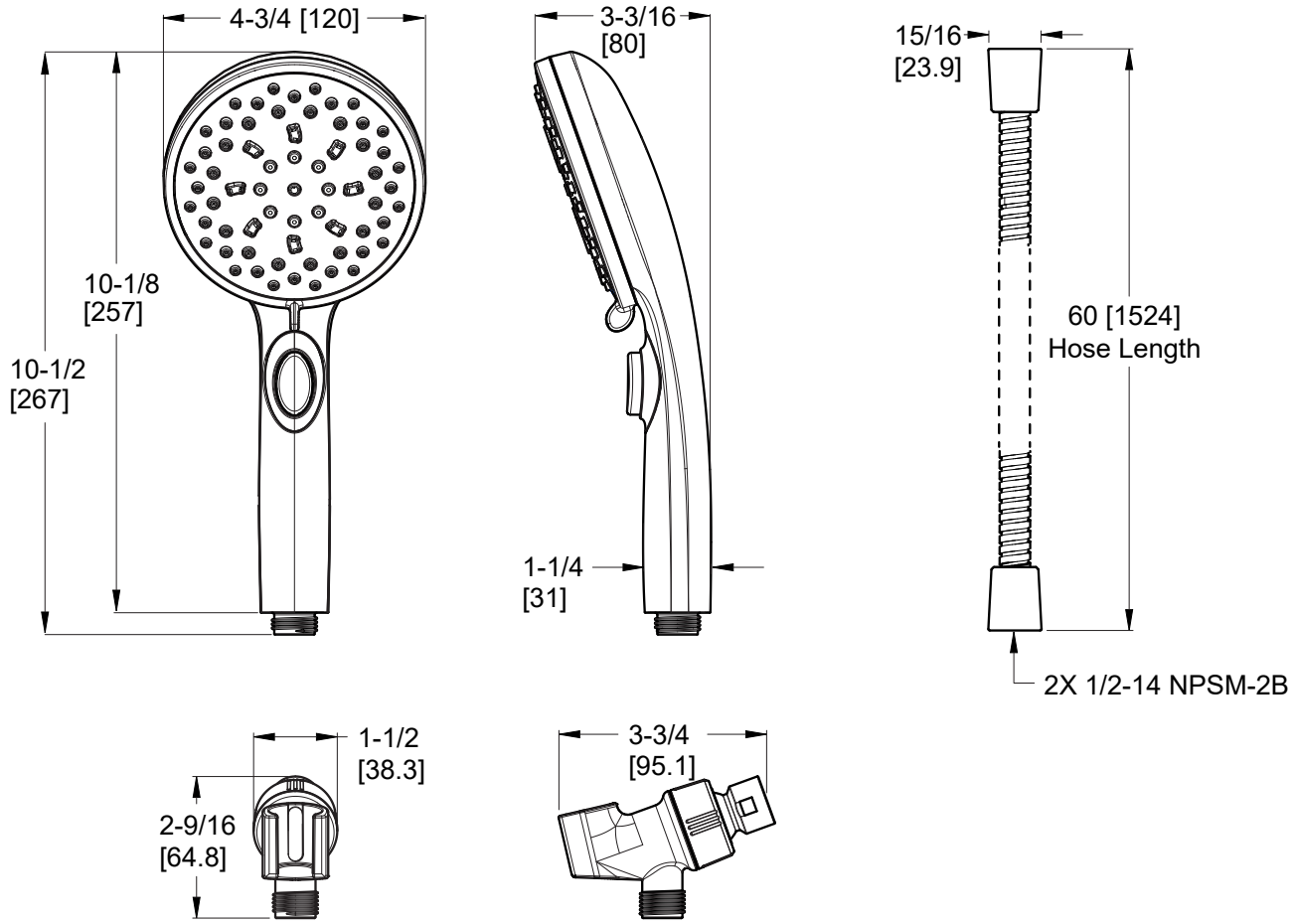





Copyright © 2023, Pfister Inc.