Pfister

Marielle™

Kitchen Faucet

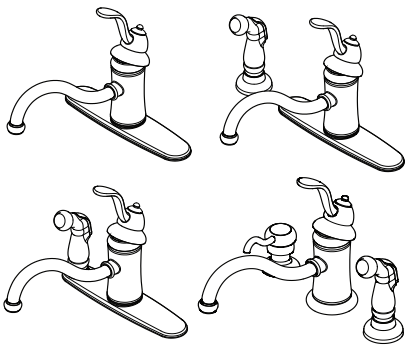

GT34-1TCC Finish*(CC)* ❑
GT34-3TCC Finish*(CC)* ❑
GT34-3TSS Finish*(SS)* ❑
GT34-3TYY Finish*(YY)* ❑
GT34-4TCC Finish*(CC)* ❑
GT34-4TSS Finish*(SS)* ❑
GT34-4TYY Finish*(YY)* ❑
GT34-PTCC Finish*(CC)* ❑
GT34-PTSS Finish*(SS)* ❑
GT34-PTYY Finish*(YY)* ❑

- 2, 3 or 4-Hole Installation
- Pforever Seal

Specifications

Features

- 1.8 GPM Flow Rate
- Solid Brass Construction
- Soap/ Lotion Dispenser Included (PT Only)
- Reinforced Deck Plate with Integrated Tie-Downs (exclude PT)
- Includes Metal and Porcelain Handle Accents
- Decorative Arc Spout
- 1 or 3-Hole Installation; Deck Plate or Single Hole Mounting Option (1T Only)
- 2 or 3-Hole Installation; With or Without Soap Dispenser (PT Only)
- 2 or 4-Hole Installation; Includes Both Deck Plate and Single Post Mounting Ring (4T Only)
- 3-Hole Installation (3T Only)
- Single-Post Mounting Option (exclude 3T)
- Coordinating Side Spray Matches Finish and Design of the Faucet (exclude 1T)
- Pforever Seal Ceramic Disc Valve
- Pforever Warranty®

Code Compliance

Pfister products are designed and manufactured in compliance with the following standards and codes:

- IAPMO Certified
- CSA B125 Certified
- ASME A112.18.1
- NSF 61/9 Annex G (Low lead)
- Cal Green Compliant
- CEC Compliant
- ADA Compliant-ANSI A117.1 (Lever handles only)
- ASME A112.18.3 (Backflow Prevention)

Dimensions

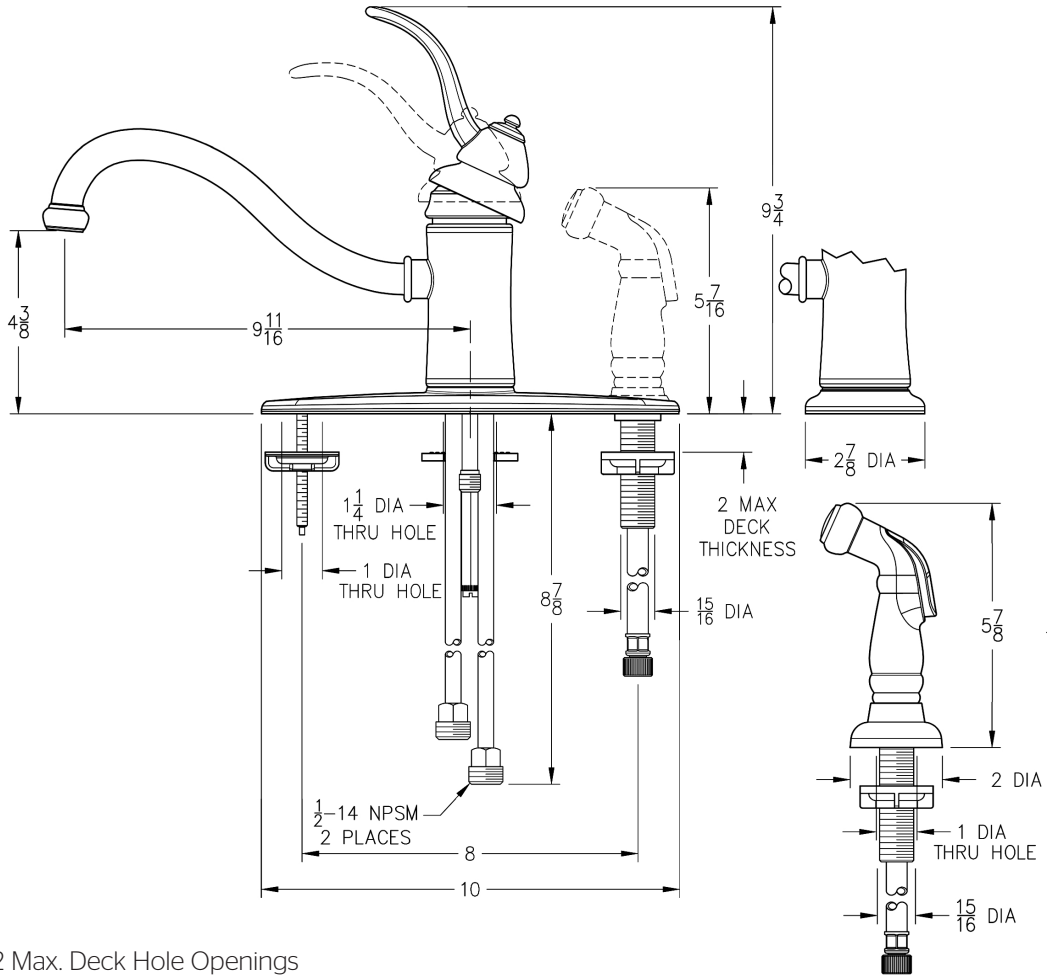

Ø1-3/8 Min to Ø1-1/2 Max. Deck Hole Openings

Copyright © 2017, Pfister Inc.