Pfister
FAUCETS

Modern Soap Pump

KSD-MDSBG Finish*(BG)* ❑
KSD-MDSC Finish*(C)* ❑
KSD-MDSD Finish*(D)* ❑
KSD-MDSGM Finish*(GM)* ❑
KSD-MDSGS Finish*(GS)* ❑
KSD-MDSSDB Finish*(SDB)* ❑

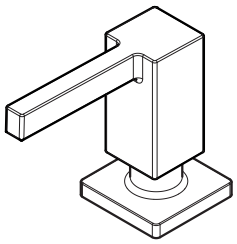

Specifications

Features

- 18oz Fill Capacity
- All Metal Construction
- Soap/Lotion Dispenser
- Top Filling
- Limited Lifetime Warranty

Dimensions

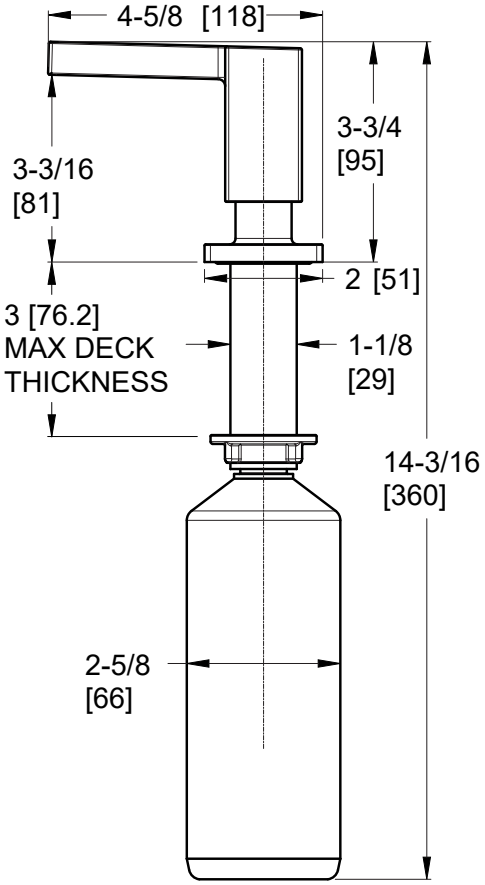

Copyright © 2026, Pfister Inc.