PFISTER

Virtue™

8"-15" Widespread Lavatory Faucet

LF-049-VTKK Finish*(KK)* ❑
LF-049-VTYY Finish*(YY)* ❑

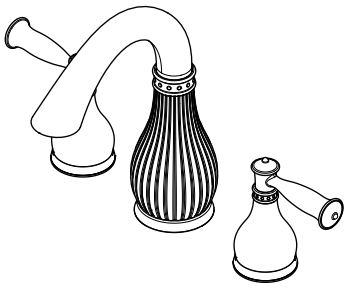

- Two-Handle
- 3-Hole Installation
- Pforever Seal

Specifications

Features

- 1.2 GPM Flow Rate
- Adjustable Install
- All Metal Construction
- Fixed Hubs
- High Arc Spout
- Mounting Hardware Included
- Mounting Posts Included
- Quick Install Tool
- Push & Seal™ Pop-Up
- Pforever Seal Ceramic Disc Valves
- Pforever Warranty®

Code Compliance

Pfister products are designed and manufactured in compliance with the following standards and codes:

- IAPMO Certified
- CSA B125 Certified
- ASME A112.18.1
- NSF 61/9 Annex G (Low lead)
- EPA WaterSense Certification 1.2 gpm, 4.5 L/Min
- Cal Green Compliant
- CEC Compliant
- ADA Compliant-ANSI A117.1 (Lever handles only)

Dimensions

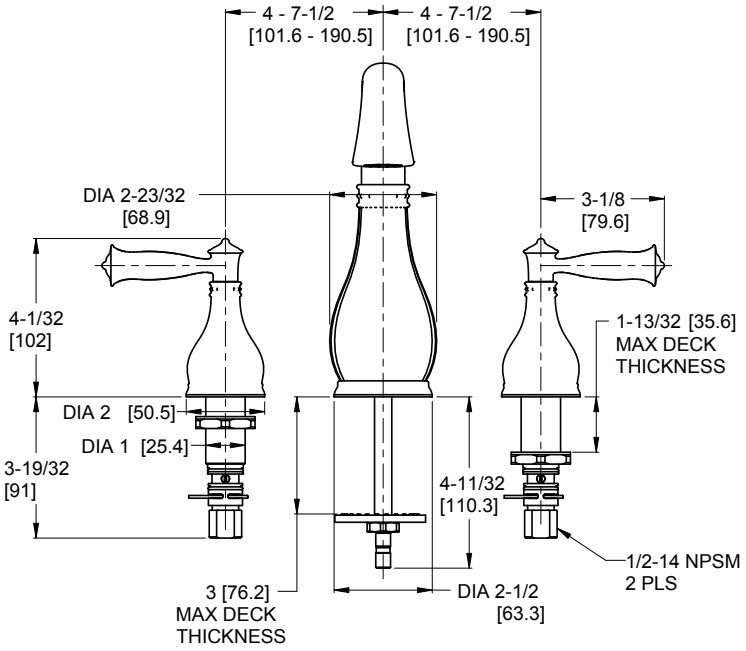

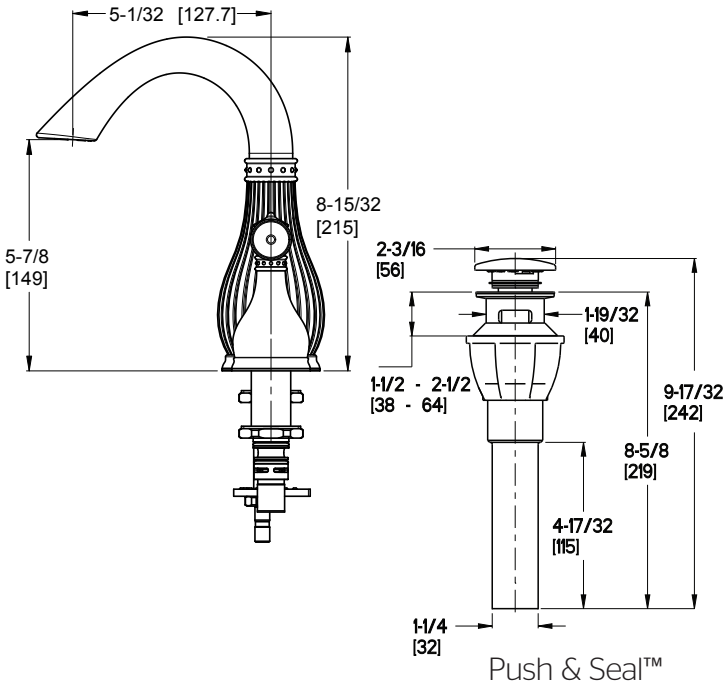

Ø1-1/4 Min to Ø1-1/2 Max. Deck Hole Openings

Copyright © 2019, Pfister Inc.