PFISTER

Pfirst Series™

8"-15" Widespread Lavatory Faucet

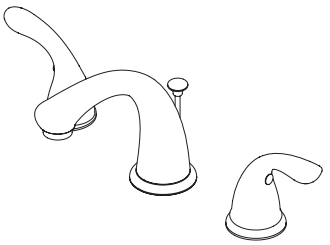

G149-5100 Finish*(C)* ❑
G149-6100 Finish*(C)* ❑
G149-610K Finish*(K)* ❑
G149-610Y Finish*(Y)* ❑

- Lever Handles
- 3-Hole Installation
- Pforever Seal
- Metal Pop-Up

Specifications

Features

- 1.5 GPM Flow Rate
- Metal Lever Handles
- No Pop-Up Drain (5100 Only)
- Metal Pop-Up Drain (610* Only)
- Includes Cap For Pop-Up Hole (5100 Only)
- Pforever Seal Ceramic Disc Valves
- Pforever Warranty®

Code Compliance

Pfister products are designed and manufactured in compliance with the following standards and codes:

- IAPMO Certified
- CSA B125 Certified
- ASME A112.18.1
- NSF 61/9 Annex G (Low lead)
- Cal Green Compliant
- EPA Watersense Certification 1.5 gpm, 5.7L/Min
- ADA Compliant-ANSI A117.1 (Lever handles only)

Dimensions

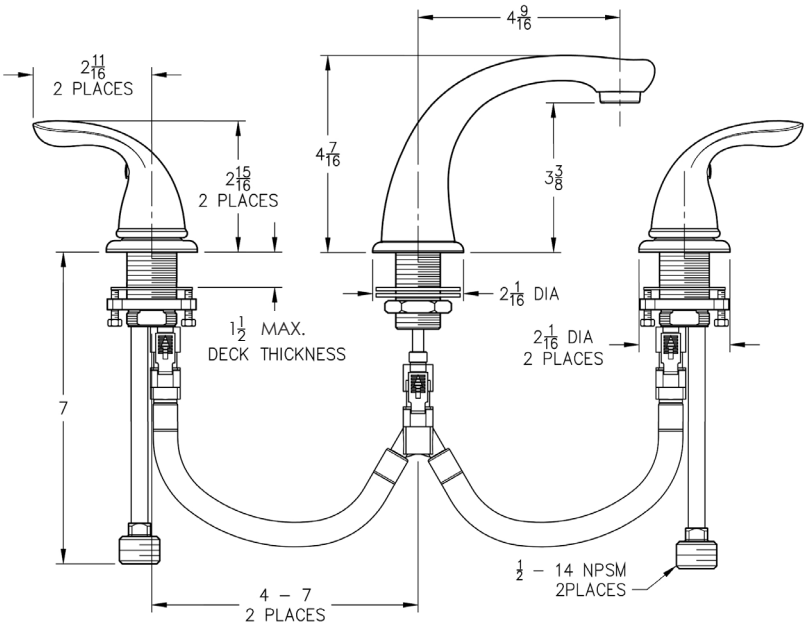

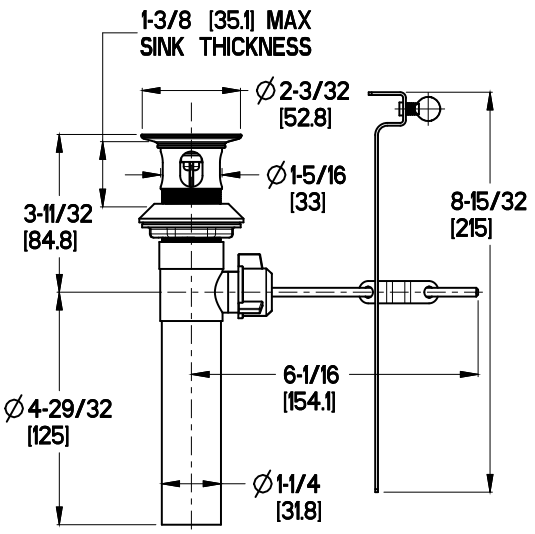

Metal Pop-Up

Ø1-1/4 Min to Ø1-1/2 Max. Deck Hole Openings

Copyright © 2019, Pfister Inc.